ARIEL E50 PRO

£5,499.99 / €6,299.99

SPECS

FRAME	
SIZES	SM / MD / LG / XL
COLOUR	KHAKI GREEN
FRAME	SERIES 3 CUSTOM BUTTED AND HYDROFORMED 6013 ALLOY FRONT TRIANGLE AND SWINGARM / INTERGRATED BATTERY AND MOTOR MOUNT / 150MM TRAVEL
FORK	FOX 38-E PERFORMANCE ELITE / 160MM TRAVEL
REAR-SHOCK	FOX FLOAT X2 PERFORMANCE ELITE
HEADSET	PRESTINE PT-F13
COMPONENTS	
HANDLEBARS	RACEFACE ATLAS 35 / 820MM WIDE / 35MM
STEM	RACEFACE CHESTER 35 / 40MM
GRIPS	ODI ELITE MOTION
SADDLE	SARACEN CUSTOM CRMO MTB
SEATPOST	KS RAGE I / 150MM TRAVEL (125MM ON S SIZE) / 30.9MM
PEDALS	ALLOY MTB
DRIVE TRAIN	
SHIFTERS	SHIMANO SLX M7100 / 1 X 12 SPEED
REAR-DERAILLEUR	SHIMANO XT M8100 / 12 SPEED
FRONT-DERAILLEUR	N/A
CHAINSET	SHIMANO FC-EM600 / 34T / 165MM
CHAIN	KMC E12
CASSETTE	SHIMANO SLX M7100 / 12 SPEED / 10-51T
BRAKES	SHIMANO M7100 / 12 SPEED / 10-51T
BRAKE-LEVERS	SHIMANO M6100
DRIVE UNIT	SHIMANO EP-800 / MID SHIP POSITION / ASSISTANCE UP TO 25KM/H
BATTERY	FULLY INTERGRATED BT-E8035 / 504WH
WHEELS	
RIMS	DT SWISS H552 / 32H / 29" FRONT / 29" REAR (SIZES LG / XL) 29" FRONT / 27.5" REAR (SIZES SM / MD)
HUBS	SHIMANO SLX BOOST 15X110 32H FRONT / SHIMANO SLX SUPERBOOST 12 X 157 32H REAR
SPOKES	DOUBLE-BUTTED STAINLESS STEEL
TYRES	MAXXIS MINION DHRII / EXO / TR / 29 X 2.4 FRONT & REAR (SIZES LG / XL) / 29 X 2.4 FRONT / 27.5 X 2.3 REAR (SIZES SM / MD)

FEATURES

- Series 3 custom butted and hydroformed 6013 alloy front triangle and swingarm, Intergrated battery and motor mount, signature TRL suspension design, internal cable routing, 12x157mm, 150mm travel
- Motor: Shimano MTB EP800 STEPS drive unit with built in Shimano BT-E8035 504Wh battery
- Shock: Fox Float X2 Performance, 2 position adjust, 230 x 65
- Fork: Fox 38-E Performance Elite, 160mm travel, HSC LSC HSR LSR Adjust, Grip 2 Damper, 15x110
- Drivetrain: Shimano XT M8100 / SLX M7100 12 Speed, 10-51T
- Brakes: Shimano M6120 calipers with M6100 Deore levers
- Components: Raceface Atlas 35 bar and Chester 35 stem, ODI grips, KS Rage I dropper post
- Tubeless ready / 1 bottle mount (550ml)

GEOMETRY

SIZE	S	M	L	XL
SEAT TUBE (MM)	370	410	460	510
TOP TUBE (MM)	612	637	665	688
REACH (MM)	455	480	505	525
STACK (MM)	632	632	641	655
HEAD TUBE (MM)	115	115	125	140
HEAD ANGLE (°)	65	65	65	65
SEAT ANGLE (°)	76	76	76	76
BOTTOM BRACKET TO SADDLE (MM)	690	740	790	840
EFFECTIVE SEAT ANGLE (°)	76.3	76.1	76	75.9
ACTUAL SEAT ANGLE (°)	73.8	73.8	73.8	73.8
CHAINSTAY (MM)	465	465	465	465
BOTTOM BRACKET DROP (MM)	25	25	25	25
BOTTOM BRACKET (MM)	350	350	350	350
WHEELBASE (MM)	1250	1275	1304	1330
HEAD SET	ZS44/ZS56	ZS44/ZS56	ZS44/ZS56	ZS44/ZS56
LOWER STACK HEIGHT (MM)	2.9	2.9	2.9	2.9
AXLE TO CROWN (MM)	571	571	571	571
OFFSET (MM)	43	43	43	43
STANDOVER (MM)	794	794	793	793

The image above is for illustration purposes only. Saracen reserves the right to change spec, colour, features and price without prior warning.

ARIEL E50 PRO

EXPLODED DRAWING

RECOMMENDED THREADLOCK: MEDIUM STRENGTH REMOVABLE ANAEROBIC THREADLOCKER

RECOMMENDED GREASE: WATERPROOF GREASE (SUCH AS PARK TOOL POLYLUBE)

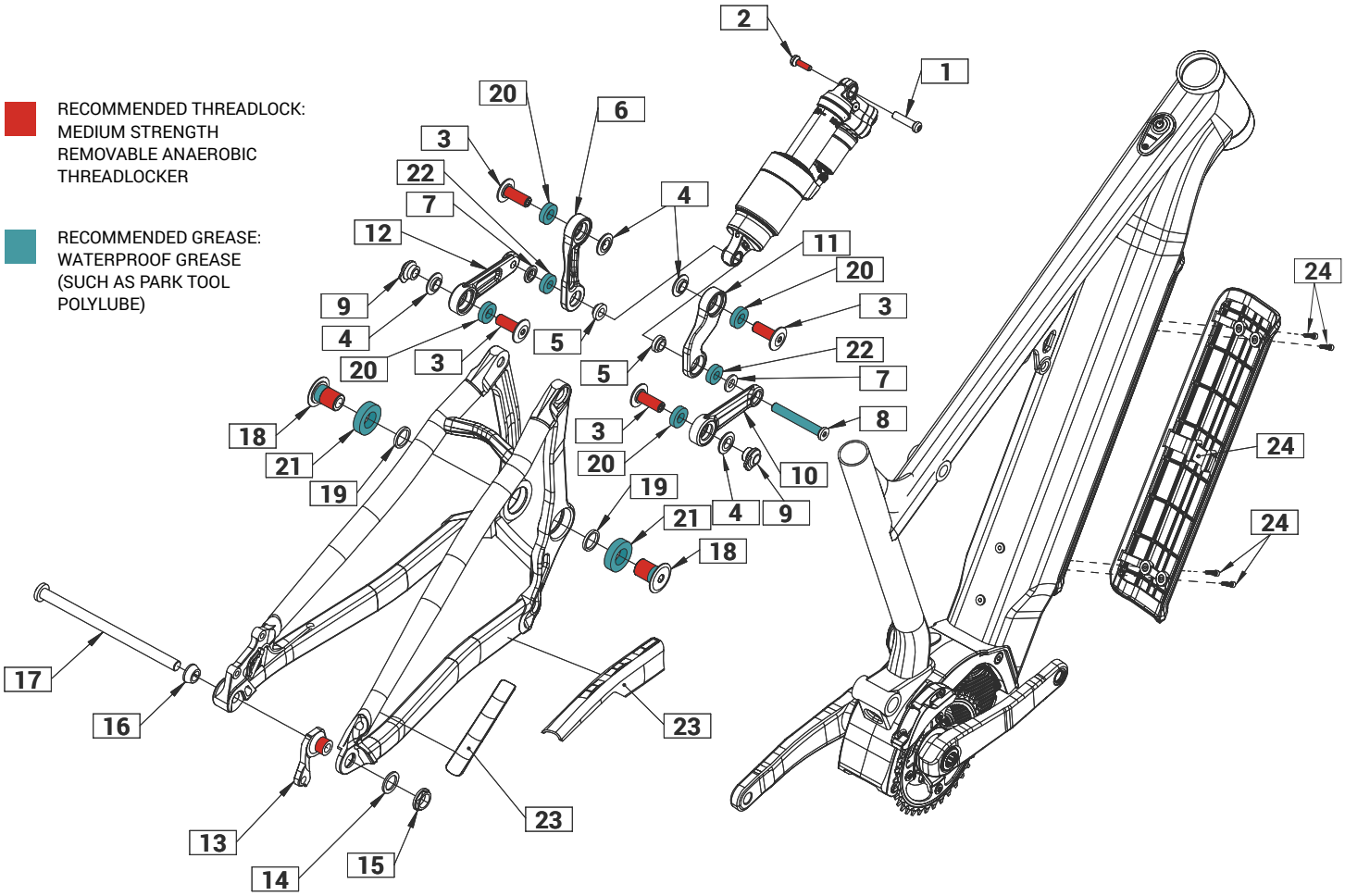

ITEM	PART NUMBER	DESCRIPTION	QTY NEEDED	TORQUE	NOTES
1 & 2	RNSPR50008	ARIEL UPPER SHOCK BOLT	1	9NM	PART NUMBER INCLUDES ITEM 1 & 2
3	RNSPR50006	ARIEL LINKAGE AXLE (PAIR)	4	15NM	–
4	RNSPR50007	ARIEL LINKAGE SPACER (PAIR)	4	–	–
5	RNSPR50005	ARIEL INNER SHOCK SPACERS (PAIR)	2	–	–
6 & 11	RNSPR50002	ARIEL ROCKER LINK ARMS (PAIR)	1	–	PART NUMBER INCLUDES ITEM 6 & 11
7	RNSPR50004	ARIEL OUTER SHOCK SPACERS (PAIR)	2	–	–
8	RNSPR50003	ARIEL LOWER SHOCK BOLT	1	10NM	–
9	RNSPR50009	ARIEL SWING ARM THREADED INSERT (PAIR)	2	–	–
10 & 12	RNSPR50000	ARIEL PUSH LINK 27.5 (PAIR)	1	–	PART NUMBER INCLUDES ITEM 10 & 12
10A + 12A	RNSPR50001	ARIEL PUSH LINK 29 (PAIR)	1	–	PART NUMBER INCLUDES ITEM 10A & 12A
13 & 15	RNS4049	ARIEL NON-DIRECT HANGER + NUT	1	20NM	PART NUMBER INCLUDES ITEM 13 & 15
13 & 15	RNS4047	ARIEL DIRECT HANGER + NUT	1	20NM	PART NUMBER INCLUDES ITEM 13 & 15
14	RNSPR50010	ARIEL HANGER WASHER	1	–	–
16	RNSPR50011	ARIEL AXLE TAPER WASHER	1	–	–
17	RNSPR50012	ARIEL 157 REAR AXLE	1	15NM	–
18 & 19	RNS5224	ARIEL MAIN AXLE BOLTS + SPACERS (PAIR)	2	36NM	PART NUMBER INCLUDES ITEM 18 & 19
20	N/A	ARIEL LINKAGE BEARINGS 6902.RS	4	–	–
21	N/A	ARIEL MAIN PIVOT BEARINGS 6904.RS	2	–	–
22	N/A	ARIEL LINKAGE BEARINGS 6900.RS	2	–	–
23	RNSPR50016	ARIEL CHAINSTAY PROTECTOR	1	–	–
24	RNSPR50017	ARIEL-E DOWNTUBE PROTECTOR	1	–	–

ARIEL E50 PRO
BATTERY ASSEMBLY

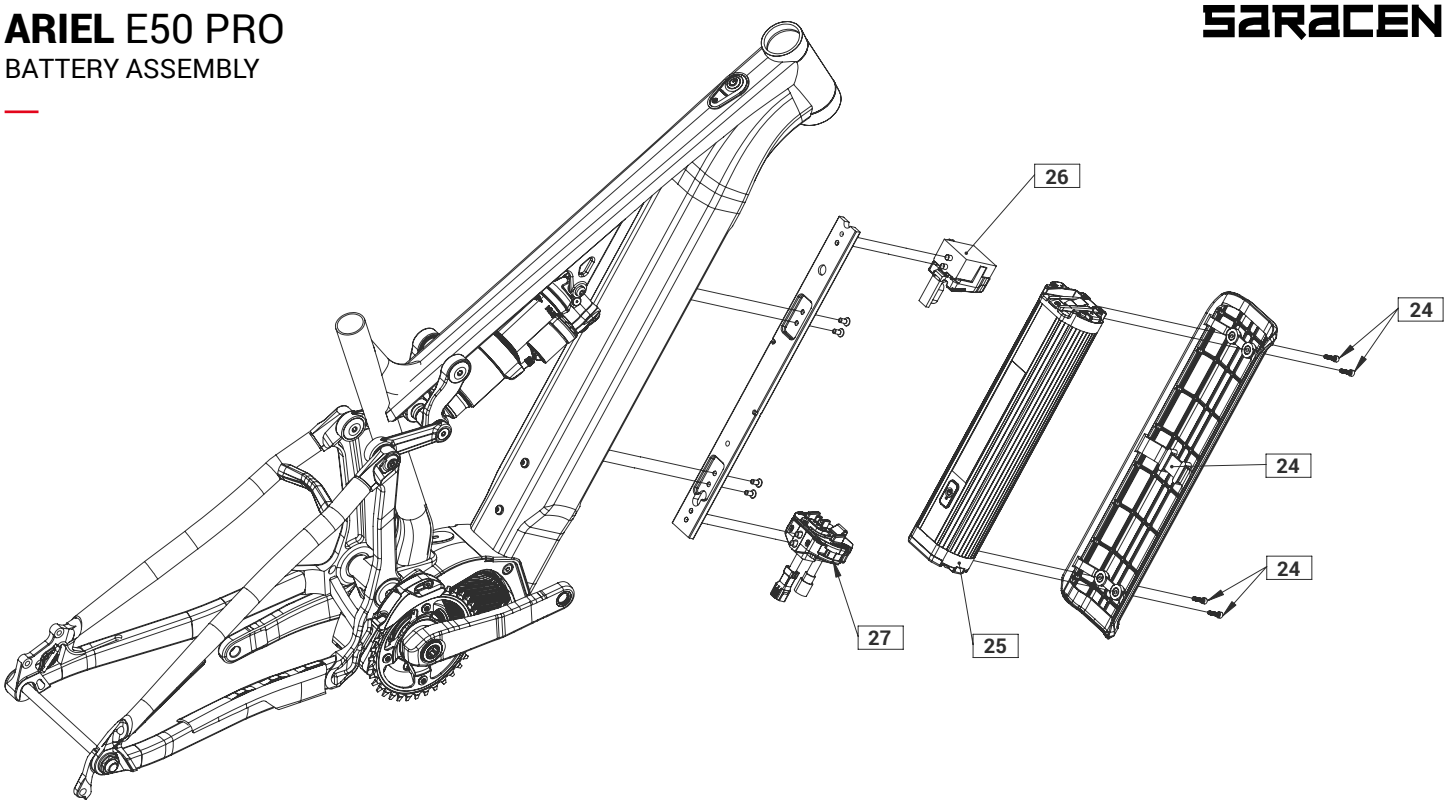

ITEM	PART NUMBER	DESCRIPTION	QTY NEEDED	TORQUE	NOTES
24	RNSPR50017	ARIEL-E DOWNTUBE PROTECTOR	1	–	–
25	BTE8035A	BATT STEPS BTE8035 504WH INT FRA MNT BK	1	–	SHIMANO PART
26	Y7GS98010	SPRE BM-E8030 UPPER MOUNT UNIT	1	–	SHIMANO PART
27	BME80301A1	SPRE BATT MOUNT W/KEY TYPE 250/200MM	1	–	SHIMANO PART

ARIEL E50 PRO
SPEED SENSOR ASSEMBLY

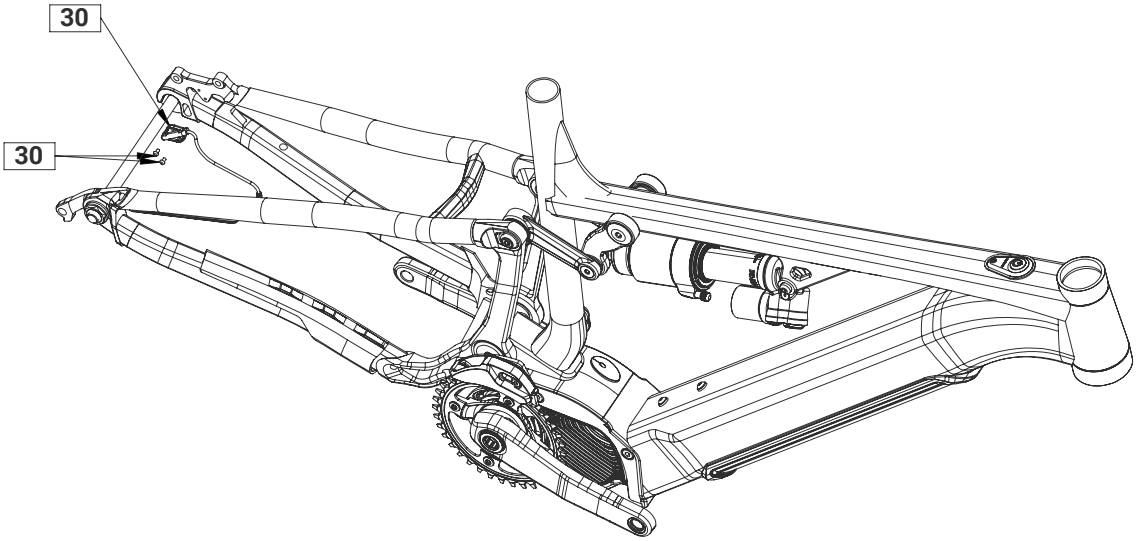

ITEM	PART NUMBER	DESCRIPTION	QTY NEEDED	TORQUE	NOTES
30	SMDUE11A	SPRE SMDUE11 SPEED SENSOR	1	–	SHIMANO PART

ARIEL E50 PRO

DRIVE UNIT EP800

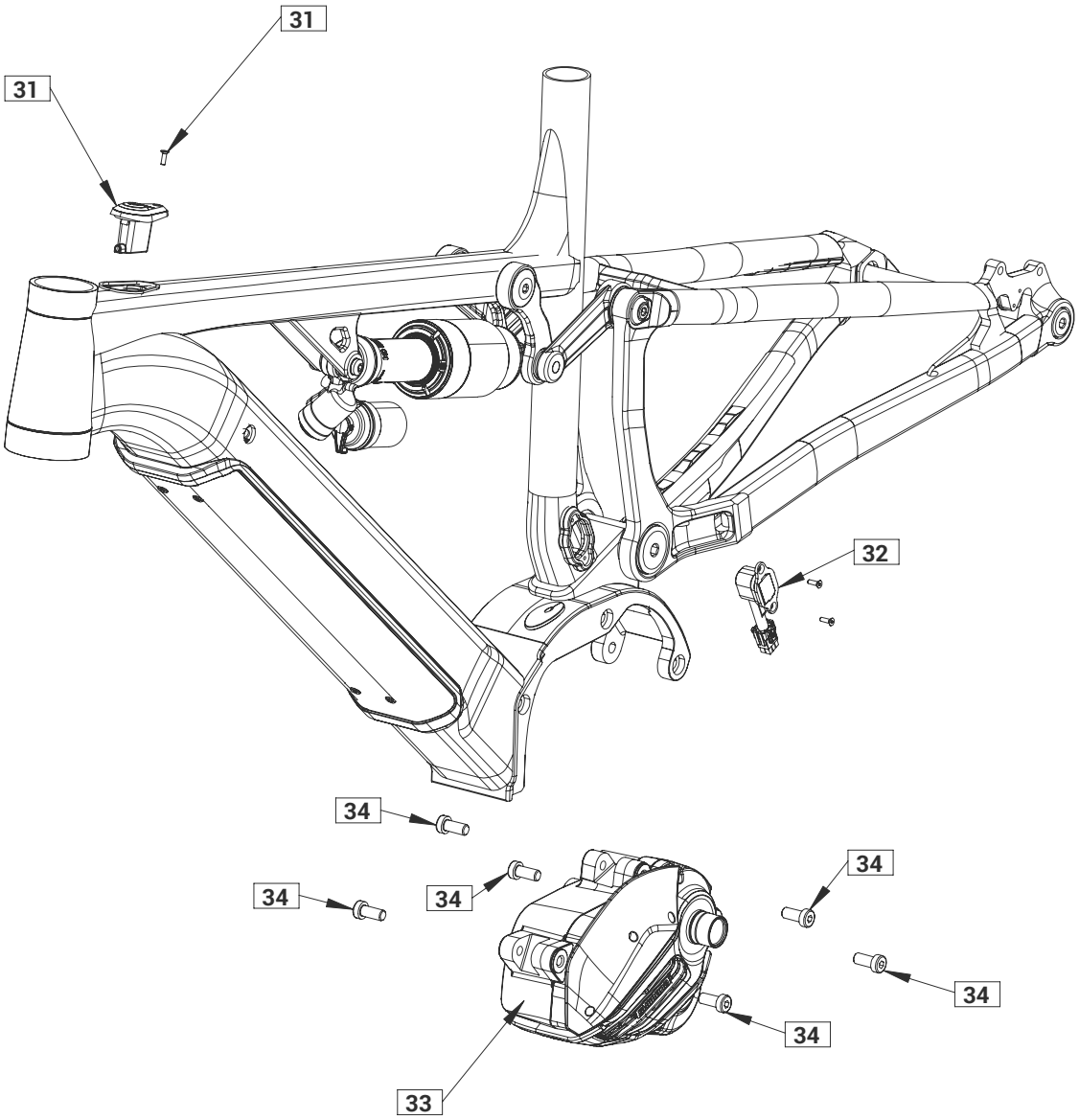

ITEM	PART NUMBER	DESCRIPTION	QTY NEEDED	TORQUE	NOTES
31	EWSW100A	SWITCH EWSW100 STEPS SATELLITE SWITCH	1	–	SHIMANO PART
32	EWCP100A	SPRE EWCP100 SATELLITE CHARGE PORT 200MM	1	–	SHIMANO PART
33	DUEP800	DRIVE UNIT DUEP800 W/O COVER	1	–	SHIMANO PART
34			1	–	SHIMANO PART

ARIEL E50 PRO
TECHNICAL INFORMATION

MODEL	ARIEL E50 PRO
FRAME MATERIAL	AL-6013
REAR TRAVEL	150MM
SHOCK LENGTH / STROKE	230MM X 65MM
SHOCK SAG	17MM – 19.5MM
SAG EYE TO EYE	213MM – 211.5 MM
PIGGY BACK COMPATIBLE	YES
FRAME SHOCK BUSHING	22MM X 8MM
LINKAGE SHOCK BUSHING	22MM X 10MM
RECOMMENDED / MAX FORK LENGTH	571MM/581MM
OFFSET	42-44MM
RECOMMENDED / MAX FORK TRAVEL	29": 160MM/170MM
MAXIMUM TYRE	29" X 2.6" / 27.5" X 2.6"
BRAKE MOUNT TYPE	IS160
MAX REAR ROTOR	200MM
SEAT POST	30.9MM
SEAT COLLAR	34.9MM
BOTTOM BRACKET TYPE	N/A
ISCG	05
CRANK CHAINLINE	SUPER BOOST
MAX CHAIN RING	38T
REAR HUB TYPE	12 X 157

FOX SUSPENSION
SETUP GUIDE

FOX FLOAT X2 / 230mm x 65mm

RIDER WEIGHT (LBS)	RIDER WEIGHT (KGS)	PRESSURE (PSI)	SAG (%)	SAG (MM)	LSR (CLICKS)	HSR (CLICKS)	LSC (CLICKS)	HSC (CLICKS)
90	41	105	25-30%	16-19MM	15-17	7-8	16-18	7-8
110	50	130	25-30%	16-19MM	12-14	5-6	14-16	6-7
130	59	160	25-30%	16-19MM	9-11	4-5	13-15	6-7
150	68	180	25-30%	16-19MM	7-9	3-4	11-13	5-6
170	77	210	25-30%	16-19MM	6-8	3-4	8-10	4-5
190	86	235	25-30%	16-19MM	4-6	2-3	6-8	4-5
210	95	260	25-30%	16-19MM	2-4	1-2	2-4	3-4
230	104	290	25-30%	16-19MM	1-3	0-1	1-3	2-3

NOTE: ALL CLICKS ARE FROM FULLY CLOSED POSITION

The image above is for illustration purposes only. Saracen reserves the right to change spec, colour, features and price without prior warning.