ARIEL 80

SARACEN

SPECS

FRAME	
SIZES	SM / MD / LG / XL
COLOUR	MATT ORANGE
FRAME	SERIES 3 CUSTOM BUTTED AND HYDROFORMED 6013 ALLOY FRONT TRIANGLE AND SWINGARM / 180mm TRAVEL
FORK	ROCKSHOX ZEB / 180mm TRAVEL
REAR-SHOCK	MARZOCCHI BOMBER CR
HEADSET	PRESTINE PT-F13
COMPONENTS	
HANDLEBARS	RACEFACE CHESTER 35 / 780mm / 35mm
STEM	RACEFACE CHESTER 35 / 40mm
GRIPS	ODI ELITE MOTION
SADDLE	SARACEN CUSTOM CRMO MTB
SEATPOST	KS RAGE I / 170mm TRAVEL (150mm ON S SIZE) / 30.9mm
PEDALS	N/A
DRIVE TRAIN	
SHIFTERS	SHIMANO DEORE M6100 / 1 X 12 SPEED
REAR-DERAILLEUR	SHIMANO SLX M7100 / 12 SPEED
FRONT-DERAILLEUR	N/A
CHAINSET	SHIMANO DEORE FC-M6130 / 32T / 170mm
CHAIN	KMC X12
CASSETTE	SHIMANO DEORE M6100 / 12 SPEED / 10-51T
BRAKES	SHIMANO M6120 203/203mm
BRAKE-LEVERS	SHIMANO M6120
WHEELS	
RIMS	DT SWISS E532 / 32H / 27.5"
HUBS	KT BOOST 15X110 SEALED BEARING 32H FRONT / KT SUPERBOOST 12X157 SEALED BEARING 32H REAR
SPOKES	DOUBLE-BUTTED STAINLESS STEEL
TYRES	MAXXIS MINION DHRII / EXO / TR / 27.5 X 2.4

FEATURES

- Series 3 custom butted and hydroformed 6013 alloy front triangle and swingarm, signature TRL suspension design, internal cable routing, 12 x 157mm SuperBoost, 180mm travel
- Shock: Marzocchi Bomber CR
- Fork: Rockshox Zeb, 180mm travel, rebound adjust, Charger damper, Debonair, 15 x 110 Boost
- Drivetrain: Shimano SLX M7100 / Deore M6100 12 Speed, 10-51T
- Brakes: Shimano M6120 calipers with M6120 Deore levers
- Components: Raceface Chester 35 bar and stem, ODI grips, KS Rage I dropper post
- Tubeless ready

GEOMETRY

SIZE	S	M	L	XL
SEAT TUBE (mm)	360	360	410	460
TOP TUBE (mm)	580	607	635	663
REACH (mm)	435	460	485	510
STACK (mm)	602	610	624	637
HEAD TUBE (mm)	100	110	125	140
HEAD ANGLE (°)	63.5	63.5	63.5	63.5
SEAT ANGLE (°)	76.5	76.5	76.5	76.5
BOTTOM BRACKET TO SADDLE (mm)	690	740	790	840
EFFECTIVE SEAT ANGLE (°)	77	76.5	76.1	75.8
ACTUAL SEAT ANGLE (°)	70.4	70.4	70.4	70.4
CHAINSTAY (mm)	438	438	438	438
BOTTOM BRACKET DROP (mm)	14	14	14	14
BOTTOM BRACKET (mm)	346	346	346	346
WHEELBASE (mm)	1207	1236	1268	1300
HEAD SET	ZS44/ZS56	ZS44/ZS56	ZS44/ZS56	ZS44/ZS56
LOWER STACK HEIGHT (mm)	2.9	2.9	2.9	2.9
AXLE TO CROWN (mm)	572	572	572	572
OFFSET (mm)	37	37	37	37
STANDOVER (mm)	738	738	739	739

The image above is for illustration purposes only. Saracen reserves the right to change spec, colour, features and price without prior warning.

ARIEL 80

EXPLODED DRAWING

RECOMMENDED THREADLOCK: MEDIUM STRENGTH
REMOVABLE ANAEROBIC THREADLOCKER

RECOMMENDED GREASE: WATERPROOF GREASE
(SUCH AS PARK TOOL POLYLUBE)

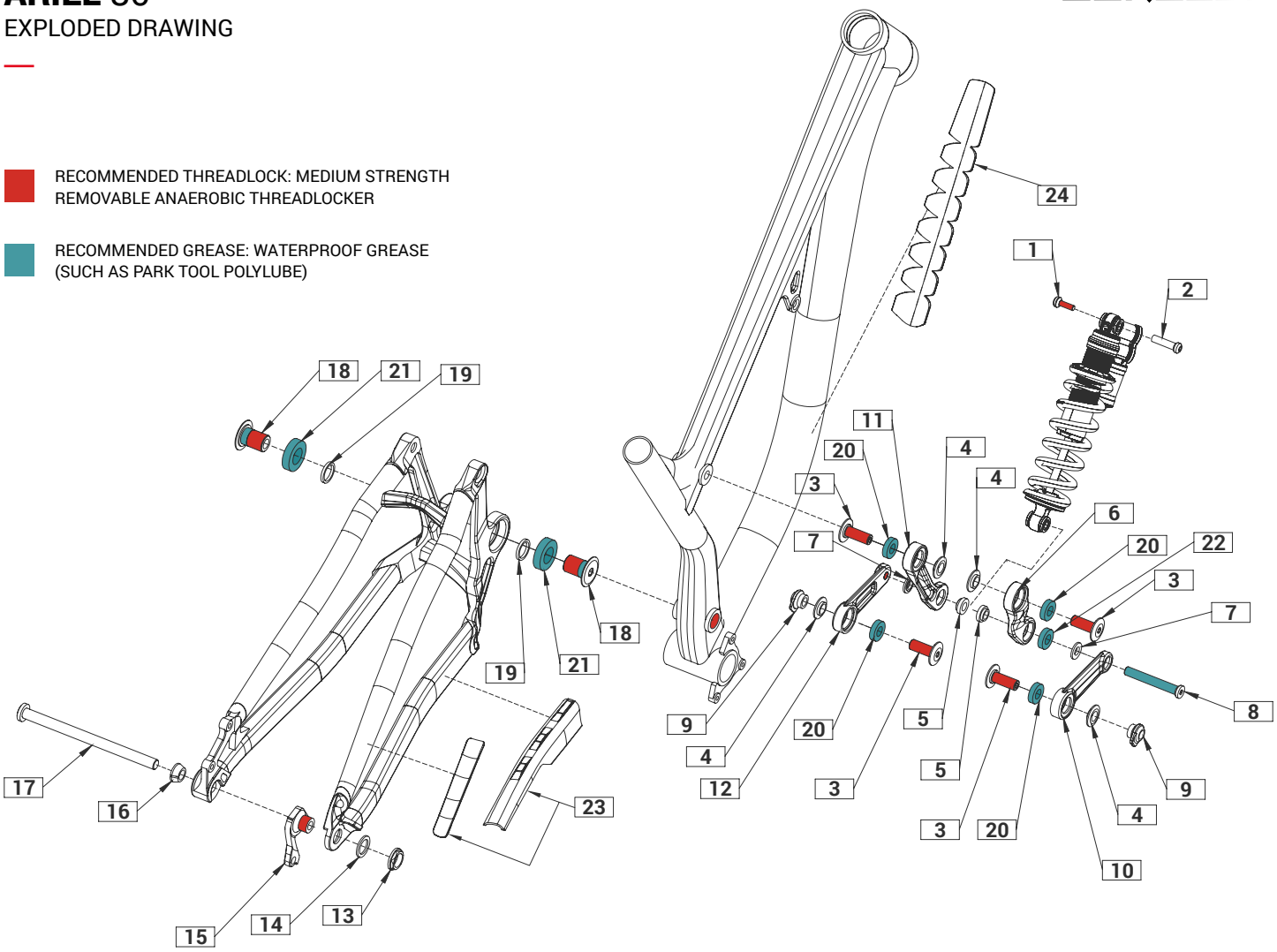

ITEM	PART NUMBER	DESCRIPTION	QTY NEEDED	TORQUE	NOTES
1 & 2	RNSPR50008	ARIEL UPPER SHOCK BOLT	1	9Nm	PART NUMBER INCLUDES ITEM 1 & 2
3	RNSPR50006	ARIEL LINKAGE AXLE (PAIR)	4	15Nm	–
4	RNSPR50007	ARIEL LINKAGE SPACER (PAIR)	4	–	–
5	RNSPR50005	ARIEL INNER SHOCK SPACERS (PAIR)	2	–	–
6 & 11	RNSPR50002	ARIEL ROCKER LINK ARMS (PAIR)	1	–	PART NUMBER INCLUDES ITEM 6 & 11
7	RNSPR50004	ARIEL OUTER SHOCK SPACERS (PAIR)	2	–	–
8	RNSPR50003	ARIEL LOWER SHOCK BOLT	1	10Nm	–
9	RNSPR50009	ARIEL SWING ARM THREADED INSERT (PAIR)	2	–	–
10 & 12	RNSPR50001	ARIEL PUSH LINK (PAIR)	1	–	PART NUMBER INCLUDES ITEM 10 & 12
13 & 15	RNS4049	ARIEL NON-DIRECT HANGER + NUT	1	20Nm	PART NUMBER INCLUDES ITEM 13 & 15
13 & 15	RNS4047	ARIEL DIRECT HANGER + NUT	1	20Nm	PART NUMBER INCLUDES ITEM 13 & 15
14	RNSPR50010	ARIEL HANGER WASHER	1	–	–
16	RNSPR50011	ARIEL AXLE TAPER WASHER	1	–	–
17	RNSPR50012	ARIEL 157 REAR AXLE	1	15Nm	–
18 & 19	RNS5224	ARIEL MAIN AXLE BOLTS + SPACERS (PAIR)	2	36Nm	PART NUMBER INCLUDES ITEM 18 & 19
20	N/A	ARIEL LINKAGE BEARINGS 6901.RS	4	–	–
21	N/A	ARIEL MAIN PIVOT BEARINGS 6904.RS	2	–	–
22	N/A	ARIEL LINKAGE BEARINGS 6900.RS	2	–	–
23	RNSPR50016	ARIEL CHAINSTAY PROTECTOR	1	–	–
24	RNSPR50018	ARIEL DOWNTUBE PROTECTOR	1	–	–

ARIEL 80

TECHNICAL INFORMATION

MODEL	ARIEL 80
FRAME MATERIAL	AL-6013
REAR TRAVEL	180 mm
SHOCK LENGTH / STROKE	250 X 70
SHOCK SAG	19-21
SAG EYE TO EYE	231-229 mm
PIGGY BACK COMPATIBLE	YES
FRAME SHOCK BUSHING	22mm X 8mm
LINKAGE SHOCK BUSHING	22mm X 10mm
RECOMMENDED / MAX FORK LENGTH	571mm / 581mm
OFFSET	36-38mm
RECOMMENDED / MAX FORK TRAVEL	27.5": 180mm
MAXIMUM TYRE	27.5 X2.6
BRAKE MOUNT TYPE	IS160
MAX REAR ROTOR	200mm
SEAT POST	30.9mm
SEAT COLLAR	34.9mm
BOTTOM BRACKET TYPE	BSA73
ISCG	05
CRANK CHAINLINE	SUPER BOOST
MAX CHAIN RING	38T
REAR HUB TYPE	12 X 157

The image above is for illustration purposes only. Saracen reserves the right to change spec, colour, features and price without prior warning.